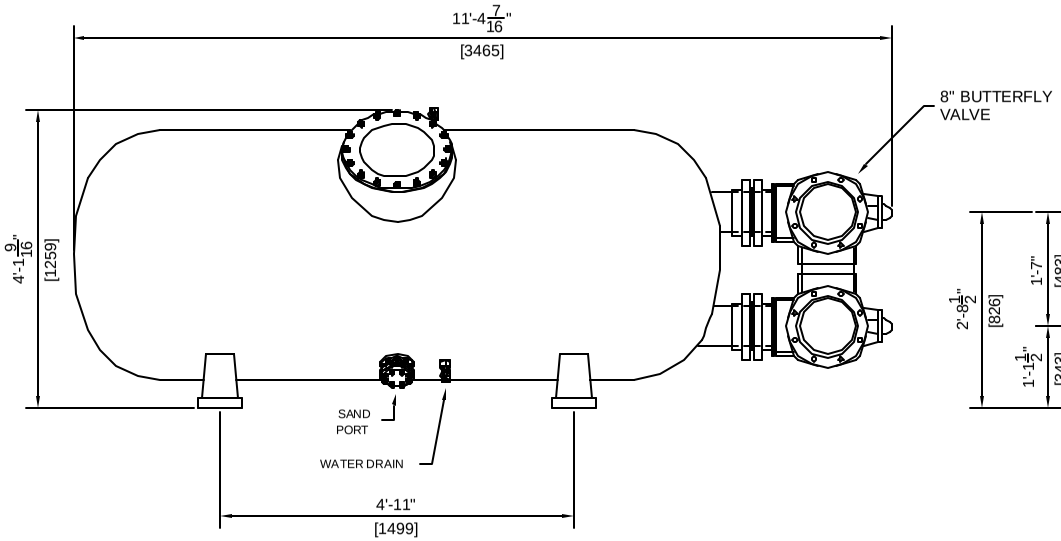


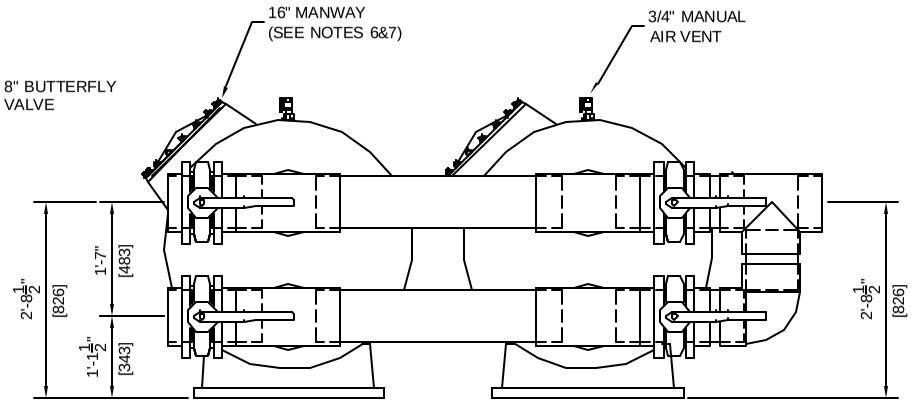


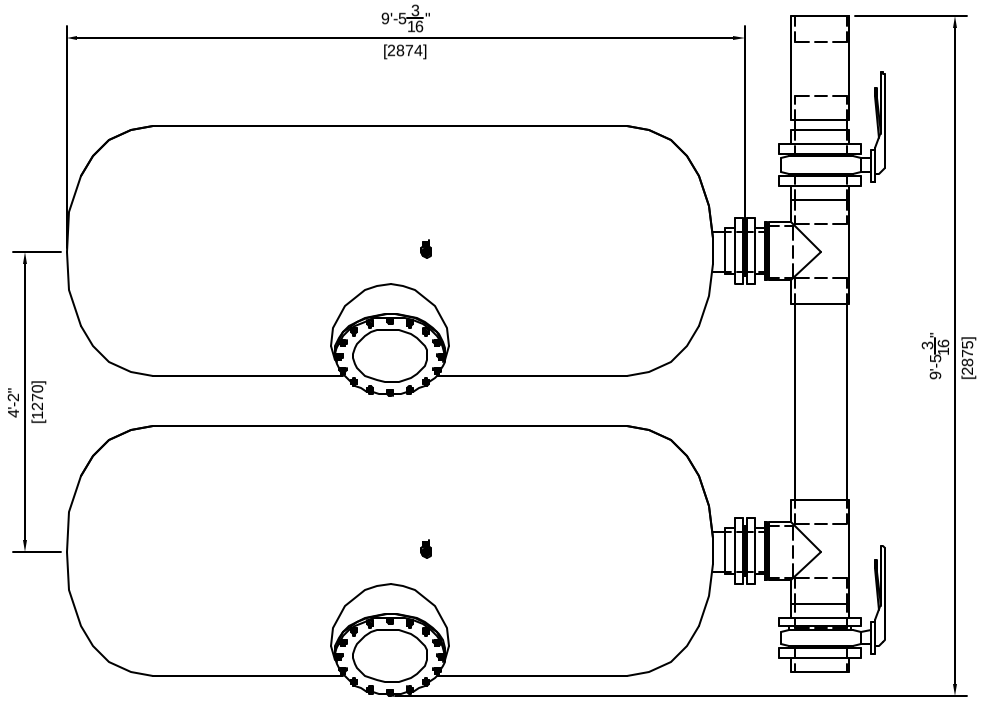


GENERAL NOTES:

1. MEDIA NOT INCLUDED WITH FILTER
2. CONCRETE SLAB TO BE DESIGNED BY OTHERS
3. FILTER MADE FROM HIGH STRENGTH FIBERGLASS AND RESINS
4. FILTERS HAVE UV STABILIZED CLEAR COAT
5. ALL INTERNAL COMPONENTS ARE CONSTRUCTED OF SCHEDULE 80 PVC.
6. MANHOLE CAN BE LOCATED ON EITHER SIDE OF FILTER. PLEASE SPECIFY AT TIME OF ORDER.
7. SAND DRAIN AND WATER DRAIN ARE PLACED ON THE SAME SIDE AS THE MANHOLE.

| FILTER DATA | |
|---|---|
| TOTAL SURFACE AREA: | 60 SQ. FT. |
| MAX WORKING PRESSURE: | 50 PSI. |
| MAX FLOW RATE: | 20 GPM / SQ. FT. |
| **MEDIA REQUIREMENTS** (PER FILTER) | |
| SAND: | 3,400 LBS |
| GRAVEL: | 0 LBS |
| **WEIGHTS** | |
| **FILTER SHIPPING WEIGHT** | **726 LBS EA.** |
| **FILTER OPERATING WEIGHT:** | **14,650 LBS** |

ASTRAL POOL
USA

DUAL HORIZONTAL FILTER (11330)
42"X106" W/ 8" 4-VALVE MANIFOLD

| | | | |
|---|---|---|---|
| MM | DWG NO. 11330A-5 | | REV |
| | 9/30/02 | SHEET 1 OF 1 | |